BURNER COMPONENTS

CSDV40 BURNER COMPONENTS SHOWN

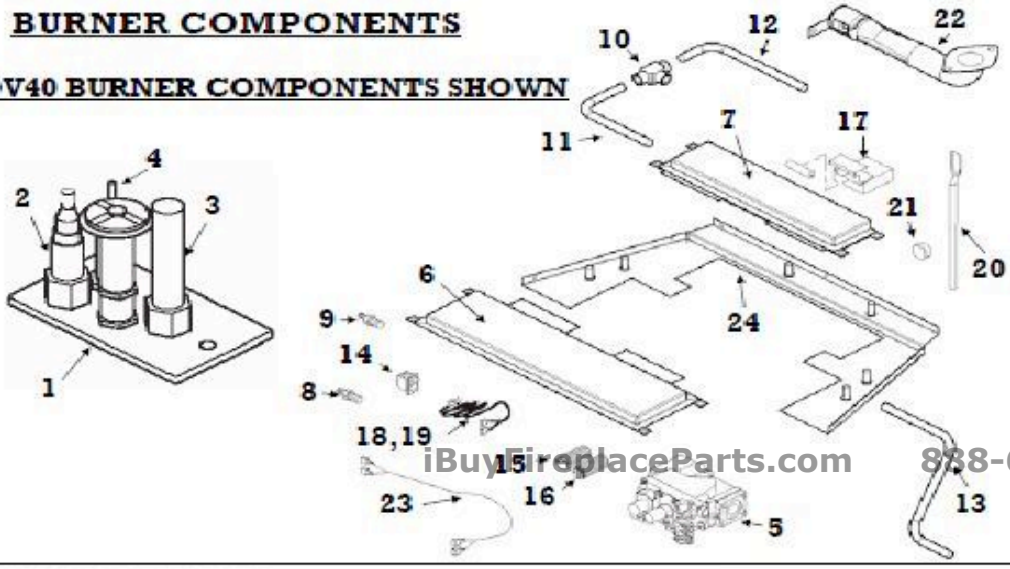

iBuyFireplaceParts.com 888-634-4289

BODY COMPONENTS

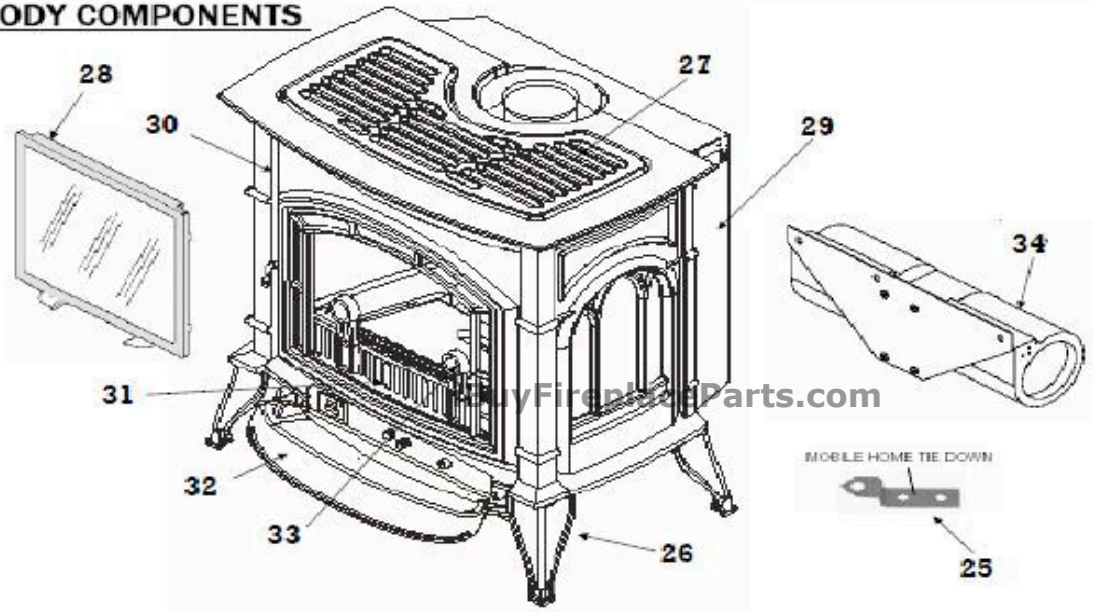

iBuyFireplaceParts.com

LOGS

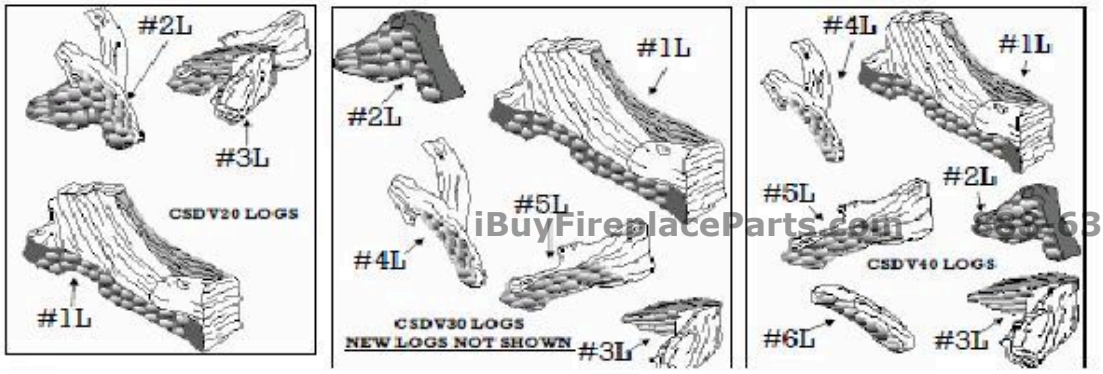

iBuyFireplaceParts.com 888-634-4289

Ref#	Part#	Description	Qty Reqd
1	37D0018K	PILOT NG	1
1A	37D0019K	PILOT LP	1

2	24D0808	THERMOCOUPLE	1
3	26D0566	THERMOPILE	1
4	10001297	ELECTRODE W/WIRE	1
5	37D0117	VALVE NG	1
5A	37D0118	VALVE LP	1
6	58D0250K	BURNER	1
8	62D3006	INJECTOR NG NO.43	1
8A	20H3146	INJECTOR LP NO.54	1
13	58D0163K	TUBE VALVE/BURNER	1
14	32D0232	R/S (ON/OFF SWITCH)	1
15	43D0094	ON/OFF KNOB EXTENSION	1
16	43D0095	HI/LOW KNOB EXTENSION	1
17	45D0077	PIEZO IGNITION MODULE	1
18	44D0501	MALE WIRE	1
19	44D0500	FEMALE WIRE	1
20	58D0048K	AIR SHUTTER ROD	1
21	45D0237	AIR SHUTTER KNOB	1
22	54D0693K	VENTURI ASSEMBLY W/ GASKET AND SCREWS	1
23	45D0546K	WIRE HARNESS	1
24	58D0210K	LOG SUPPORT BRACKET	1
N/S	45D0032	VENTURI GASKET	1
N/S	45D0541K	WIRE ASSEMBLY W/SWITCH	1
N/S	26D0665	PILOT TUBE	1
N/S	20H1011	FLEXLINE	1
N/S	58D2006K	FALL AWAY HANDLE	1
N/S	58D2004K	HANDLE(SINGLE)	1
N/S	58D0026K	EXHAUST BAFFLE	1
N/S	58D2020K	CNTRL DOOR BRACKET	2
25	58D0257K	MOBILE HOME TIE DOWN	2
26	58D4131K	LEGS- GRAPHITE	4
26A	58D4132K	LEGS- SAND	4
26B	58D4133K	LEGS- BLACK ENAMEL	4
26C	58D4134K	LEGS- BROWN	4
27	58D4021K	TRIVIT	1
28	58D0261K	CERAMIC GLASS ASSEMBLY	1
29	58D4023K	REAR SHROUD	1
N/S	58D4051	DOOR (SINGLE)- GRAPHITE	1
N/S	58D4052	DOOR (SINGLE)- SAND	1
N/S	58D0453	DOOR (SINGLE)- BLACK ENAMEL	1
N/S	58D4054	DOOR (SINGLE)- BROWN	1
31	58D4121	FETTLE	1
N/S	58D4151	WARMING SHELF- GRAPHITE	1
N/S	58D4152	WARMING SHELF- SAND	1
N/S	58D4153	WARMING SHELF- BLACK ENAMEL	1
N/S	58D4154	WARMING SHELF- BROWN	1
32	58D4111K	ASHLIP- GRAPHITE	1
32A	58D4112K	ASHLIP- SAND	1
32B	58D4113K	ASHLIP- BLACK ENAMEL	1
32C	58D4114K	ASHLIP- BROWN	1
N/S	58D1930	COMPLETE LOG SET	1
NO.1L	58D1931K	REAR LOG	1

iBuyFireplaceParts.com 888-634-4289
iBuyFireplaceParts.com
iBuyFireplaceParts.com 888-634-4289

NO.2L	58D1932K	LEFT BOTTOM LOG	1
NO.3L	58D1933K	RIGHT BOTTOM LOG	1
N/S	24D1117	ROCKWOOL	1
N/S	45D0551K	RESTRICTOR DISC	1
N/S	58D6056	MANUAL	1

iBuyFireplaceParts.com 888-634-4289

iBuyFireplaceParts.com

iBuyFireplaceParts.com 888-634-4289