REPLACEMENT PARTS LIST

Doc # HVF003a

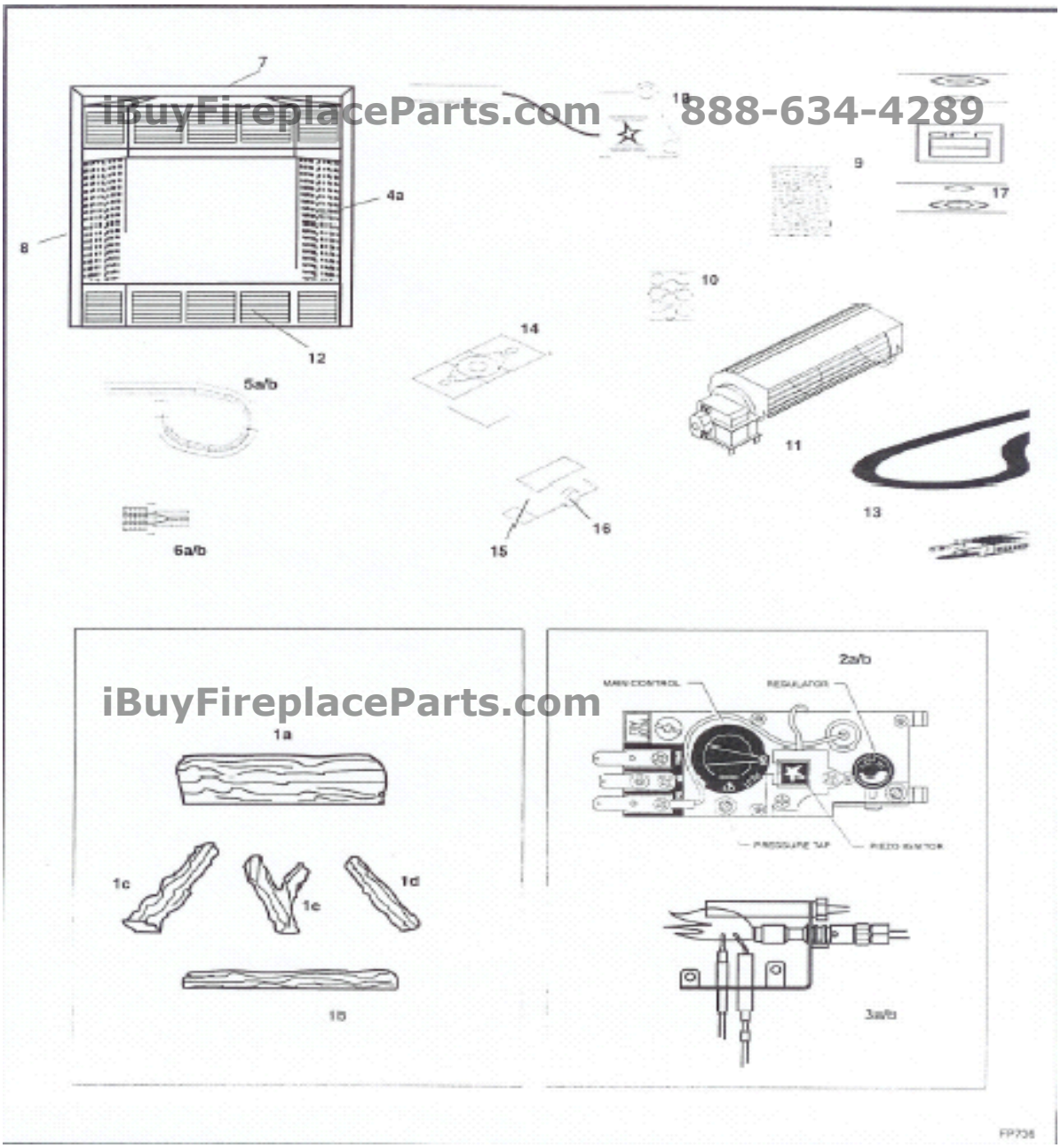

iBuyFireplaceParts.com 888-634-4289

iBuyFireplaceParts.com 888-634-4289

ACCESSORIES (12-16): DO NOT COME WITH THE UNIT.

REPLACEMENT PARTS LIST

Doc # HVF003a

UVHB26

OBSOLETE MODEL

BERKSHIRE VENT-FREE FIREPLACE

iBuyFireplaceParts.com 888-634-4289

REF.	DESCRIPTION	PART #
1	LOG ASSEMBLY - **OBSOLETE**	~~3187169~~
1a	LOG BACK - **OBSOLETE**	~~3187164~~
1b	LOG FRONT - **OBSOLETE**	~~3187165~~
1c	LOG LEFT - **OBSOLETE**	~~3187166~~
1d	LOG RIGHT - **OBSOLETE**	~~3187167~~
1e	LOG "Y" - **OBSOLETE**	~~3187168~~
2a	VALVE HONEYWELL (NG)	10000235
2b	VALVE HONEYWELL (LP)	10000242
3a	PILOT ASSEMBLY (NG)	55464
3b	PILOT ASSEMBLY (LP)	55465
4a	SCREEN ASSEMBLY	3187170
5a	BURNER ASSEMBLY (NG) W/ LOGS	20004487
5b	BURNER ASSEMBLY (LP) W/ LOGS	20004488
7	TOP TRIM	3187132
8	SIDE TRIM (2)	3187130
9	VOLCANIC ROCK	7060151
10	LAVA ROCK	0055256
11	LOUVRE	3187146
12	***FAN ASSY (COMPLETE)***	***FK24***
13	***ELECTRICAL CORD (6ft.)***	***51865***
14	***FAN TEMPERATURE SENSOR***	***51704***
15	***SPEED CONTROL***	***51738***
16	***SPEED CONTROL KNOB***	***51882***
17	REMOTE SWITCH KIT	53875
18	PIEZO IGNITOR	20000062

iBuyFireplaceParts.com 888-634-4289

Note: Logs are no longer available for this model.

ACCESSORIES (12-16): DO NOT COME WITH THE UNIT.